Contents

EN

1. *Safety and operating instructions* 2
2. *Installation and hook-up* 11
3. *Description of the controls* 17
4. *Operating instructions* 27
5. *Cleaning and maintenance* 44
6. *Troubleshooting* 51

Thank you for choosing one of our products.
You are advised to read this manual carefully; it contains all the information you need about the right conditions for the proper, safe use of your dishwasher.
The individual sections are laid out to provide you with a step-by-step guide to all your appliance's functions; the texts are easy to understand and are complete with detailed illustrations.
Recommendations are given for the correct use of the baskets, spray arms, containers, filters, washing programs, and for operating the controls.
Following the cleaning instructions provided here will keep your dishwasher's performance at peak levels in the long term.
This user-friendly manual will provide answers to all your questions about use of the dishwasher.

INSTALLATION INSTRUCTIONS: these are intended for the ***qualified technician*** *who must carry out the installation, hook-up and testing of the appliance.*

USER INSTRUCTIONS: these consist of recommendations for using the appliance, a description of its controls and of the correct cleaning and maintenance procedures.

1. Safety and operating instructions

THIS MANUAL FORMS AN INTEGRAL PART OF THE APPLIANCE: IT MUST ALWAYS BE KEPT INTACT TOGETHER WITH THE DISHWASHER. BEFORE USING THE APPLIANCE, CAREFULLY READ ALL THE INSTRUCTIONS CONTAINED IN THIS MANUAL.

INSTALLATION MUST BE PERFORMED BY A QUALIFIED TECHNICIAN, IN COMPLIANCE WITH THE REGULATIONS IN FORCE. THIS APPLIANCE IS INTENDED FOR DOMESTIC USE AND SIMILAR APPLICATIONS SUCH AS THE STAFF KITCHENS OF SHOPS, OFFICES AND OTHER WORKPLACES, INSTITUTIONS, AND FOR THE USE OF GUESTS AT HOTELS, HOSTELS, BED AND BREAKFAST ESTABLISHMENTS AND OTHER RESIDENTIAL FACILITIES AND COMPLIES WITH **DIRECTIVES 2006/95/EC AND 2004/108/EC** CURRENTLY IN FORCE, INCLUDING THE PREVENTION AND ELIMINATION OF RADIO FREQUENCY INTERFERENCE.

THE APPLIANCE IS DESIGNED FOR THE FOLLOWING PURPOSE: **WASHING AND DRYING OF DISHES**; ANY OTHER USE

SHALL BE CONSIDERED IMPROPER. **THE MANUFACTURER DECLINES ALL RESPONSIBILITY FOR USES OTHER THAN THOSE DESCRIBED ABOVE.**

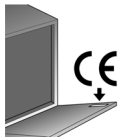

THE NAME PLATE FEATURING THE TECHNICAL DATA, SERIAL NUMBER AND MARKINGS IS VISIBLY POSITIONED ON THE INNER EDGE OF THE DOOR. **THE NAME PLATE ON THE INNER EDGE OF THE DOOR MUST NEVER BE REMOVED.**

DO NOT LEAVE THE DISCARDED PACKAGING MATERIALS UNSUPERVISED WITHIN THE HOME. SEPARATE THE VARIOUS MATERIALS WHICH MAKE UP THE PACKAGING AND TAKE THEM TO THE NEAREST SORTED WASTE COLLECTION CENTRE.

THE APPLIANCE MUST BE PROVIDED WITH AN EARTH CONNECTION IN ACCORDANCE WITH THE ELECTRICAL SAFETY REGULATIONS IN FORCE.
THE MANUFACTURER DECLINES ALL RESPONSIBILITY FOR DAMAGE TO PERSONS OR PROPERTY RESULTING FROM THE FAILURE TO EARTH THE

APPLIANCE OR FROM A DEFECTIVE EARTH CONNECTION.

IF THE APPLIANCE IS INSTALLED ON A CARPETED OR COVERED FLOOR, ENSURE THAT THE OPENINGS ON ITS UNDERSIDE ARE NOT OBSTRUCTED.

ALWAYS SWITCH OFF THE DISHWASHER AFTER EACH USE TO AVOID WASTING ELECTRICITY.

IN THE EVENT OF A FAULT, DISCONNECT THE DISHWASHER FROM THE ELECTRICAL POWER SUPPLY AND SHUT OFF THE WATER TAP.

DO NOT USE STEAM CLEANERS TO CLEAN THE DISHWASHER.

WARNING: SOME DISHWASHER DETERGENTS ARE STRONGLY ALKALINE. THEY CAN BE EXTREMELY DANGEROUS IF SWALLOWED. AVOID CONTACT WITH THE SKIN AND EYES AND KEEP CHILDREN AWAY FROM THE DISHWASHER WHEN THE DOOR IS OPEN. CHECK THAT THE DETERGENT RECEPTACLE IS EMPTY AFTER COMPLETION OF THE WASH CYCLE.

OBSOLETE APPLIANCES MUST BE RENDERED UNUSABLE. CUT OFF THE MAINS POWER CORD AFTER UNPLUGGING IT FROM THE WALL OUTLET, AND MAKE SAFE ANY COMPONENTS WHICH MIGHT BE DANGEROUS FOR CHILDREN (LOCKS, DOORS, ETC.).

THIS APPLIANCE IS MARKED ACCORDING TO THE **EUROPEAN DIRECTIVE 2002/96/EC** ON WASTE ELECTRICAL AND ELECTRONIC EQUIPMENT (**WEEE**).
BY ENSURING THIS PRODUCT IS DISPOSED OF CORRECTLY, YOU WILL HELP PREVENT POTENTIAL NEGATIVE CONSEQUENCES FOR THE ENVIRONMENT AND HUMAN HEALTH, WHICH COULD OTHERWISE BE CAUSED BY INAPPROPRIATE WASTE HANDLING OF THIS PRODUCT.

THE SYMBOL ON THE PRODUCT, OR ON THE DOCUMENTS ACCOMPANYING THE PRODUCT, INDICATES THAT THIS APPLIANCE MAY NOT BE TREATED AS HOUSEHOLD WASTE. INSTEAD IT SHALL BE HANDED OVER TO THE APPLICABLE COLLECTION POINT FOR THE RECYCLING

OF ELECTRICAL AND ELECTRONIC EQUIPMENT.
DISPOSAL MUST BE CARRIED OUT IN ACCORDANCE WITH LOCAL ENVIRONMENTAL REGULATIONS FOR WASTE DISPOSAL. FOR MORE DETAILED INFORMATION ABOUT TREATMENT, RECOVERY AND RECYCLING OF THIS PRODUCT, PLEASE CONTACT YOUR LOCAL CITY OFFICE, YOUR HOUSEHOLD WASTE DISPOSAL SERVICE OR THE SHOP WHERE YOU PURCHASED THE PRODUCT.

DO NOT USE APPLIANCES WHICH HAVE BEEN DAMAGED DURING TRANSIT! IF IN DOUBT, CONSULT YOUR DEALER.
THE APPLIANCE MUST BE INSTALLED AND CONNECTED IN ACCORDANCE WITH THE INSTRUCTIONS PROVIDED BY THE MANUFACTURER OR BY A QUALIFIED TECHNICIAN.

THIS DISHWASHER MUST BE USED BY ADULTS.
USE BY PERSONS WITH REDUCED MENTAL AND/OR PHYSICAL CAPABILITIES IS ONLY PERMITTED UNDER THE SUPERVISION OF A PERSON RESPONSIBLE FOR THEIR SAFETY.

KEEP CHILDREN AWAY FROM DETERGENTS AND PACKAGING MATERIALS (PLASTIC BAGS, POLYSTYRENE, ETC.), AND NEVER ALLOW THEM TO APPROACH OR PLAY WITH THE DISHWASHER, SINCE IT MIGHT CONTAIN DETERGENT RESIDUES CAPABLE OF CAUSING PERMANENT DAMAGE TO THE EYES, MOUTH AND THROAT, AND EVEN LEADING TO SUFFOCATION.

DO NOT INTRODUCE SOLVENTS SUCH AS ALCOHOL OR TURPENTINE WHICH MAY CAUSE AN EXPLOSION.

DO NOT LOAD DISHES THAT ARE SOILED WITH ASH, WAX OR PAINTS.

DO NOT DRINK THE WATER RESIDUES WHICH MAY BE PRESENT INSIDE THE DISHES OR DISHWASHER AT THE END OF THE WASHING PROGRAM AND BEFORE THE DRYING CYCLE.

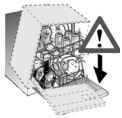

LEANING OR SITTING ON THE DISHWASHER DOOR WHEN OPEN MAY CAUSE THE APPLIANCE TO OVERTURN, PUTING PEOPLE AT RISK.

NEVER LEAVE THE DISHWASHER DOOR OPEN; PEOPLE MIGHT TRIP OVER IT.

KNIVES OR OTHER SHARP-ENDED COOKING UTENSILS MUST BE PLACED IN THE CUTLERY BASKET BLADE-DOWN, OR LAID HORIZONTAL IN THE TOP BASKET. TAKE CARE NOT TO CUT YOURSELF AND ENSURE THAT THEY DO NOT PROJECT FROM THE BASKET.

AQUASTOP MODELS

THE AQUASTOP DEVICE PREVENTS FLOODING IN THE EVENT OF A WATER LEAK. WHEN THE AQUASTOP DEVICE IS TRIPPED, CALL IN A QUALIFIED TECHNICIAN TO IDENTIFY AND REPAIR THE FAULT.

IN MODELS EQUIPPED WITH THE AQUSTOP DEVICE, THERE IS A SOLENOID VALVE INSIDE THE WATER INTAKE HOSE. **DO NOT CUT THE HOSE AND DO NOT ALLOW THE SOLENOID VALVE TO DROP INTO WATER.** IN THE EVENT OF DAMAGE TO THE WATER INTAKE HOSE, DISCONNECT THE APPLIANCE FROM THE ELECTRICAL POWER SUPPLY AND FROM THE WATER SUPPLY.

MODELS WITH INTERNAL LIGHTING
THE APPLIANCE'S LIGHTING SYSTEM BELONGS TO RISK GROUP 1 UNDER THE IEC/EN 62471 STANDARD. THIS MEANS THAT THERE IS NO PHOTOBIOLOGICAL RISK IN NORMAL CONDITIONS OF USE.

IMMEDIATELY AFTER INSTALLING THE DISHWASHER, PERFORM A QUICK TEST OF THE APPLIANCE FOLLOWING THE INSTRUCTIONS BELOW. IF THE DISHWASHER FAILS TO OPERATE CORRECTLY, DISCONNECT IT FROM THE ELECTRICAL POWER SUPPLY AND CALL THE NEAREST TECHNICAL SERVICE CENTRE. **DO NOT ATTEMPT TO REPAIR THE APPLIANCE.**

THE DISHWASHER MEETS ALL THE REQUIREMENTS SET OUT BY THE REGULATIONS IN FORCE CONCERNING SAFETY AND ELECTRICAL EQUIPMENT. ANY TECHNICAL CHECKS SHOULD BE CONDUCTED EXCLUSIVELY BY A TRAINED AND AUTHORISED TECHNICIAN: **REPAIRS CARRIED OUT BY UNAUTHORISED PERSONS WILL INVALIDATE THE WARRANTY, AS WELL AS POSING A POTENTIAL HAZARD TO THE USER.**

***The manufacturer declines all responsibility* for damage to persons or property resulting from failure to observe the above precautions, from tampering with even a single component of the appliance, or from the use of non original spare parts.**

TECHNICAL DATA	
Width	597 ÷ 599 mm
Depth measured flush with the outer edge of the control panel	Fully integrated: 630 mm Free standing: 675 mm
Height	Fully integrated: 820-890 mm Free standing: 885 mm
Capacity	13 Standard place settings
Water supply pressure	min. 0,05 - max. 0,9 MPa (min. 0.5 – max. 9 bar)
Electrical characteristics	See rating plate

2. Installation and hook-up

Remove the polystyrene basket retainers.
Position the appliance in the desired place of installation. The back or sides of the dishwasher may be placed up against walls or other furniture units. If the dishwasher is installed near a heat source, fit the special insulating panel to prevent overheating and malfunction of the appliance. To ensure stability, install integrated or built-under dishwashers only under continuous worktops, and screw them to the adjacent units. To facilitate the installation procedure, the intake and drain hoses can be positioned in any direction; make sure that the hoses are not kinked, crushed or pulled too tightly. Make sure to tighten the locking ring-nut once the pipes have been placed in the direction required. A hole at least 8 cm in diameter is required to allow the power supply cable and pipes to pass. Before putting the dishwasher into its definitive position, turn on the water tap and check that there are no leaks from the tap connection, the dishwasher connection or the hose.

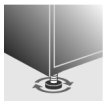

Level the appliance on the floor using its adjustable feet. This operation is essential for ensuring correct operation of the dishwasher.

Some models are equipped with only one adjustable foot at the rear, which can be adjusted by turning the screw on the lower front part of the appliance.

Building-in a dishwasher underneath a hob is ***absolutely forbidden****.*

Moreover, dishwashers may not be installed *directly touching appliances which are not conventional built-in kitchen appliances (e.g. fireplaces, stoves, etc.).*

When installing the dishwasher in a compartment next to one or more other appliances, it is essential to comply with all the recommendations provided by the appliance's manufacturer (minimum distances, installation procedures, etc.).

For free-standing models only:

- *Installing a hob on top of a free-standing dishwasher is* ***absolutely forbidden****.*
- *If the appliance is not built-in and is therefore accessible on one side, the door hinge area must be covered for safety reasons (injury hazard). The covering fixtures are available as an accessory from specialist dealers or the After-Sales Service.*
- To build in the dishwasher, the **special kit** must be purchased from authorised dealers or the After-Sales Service.

2.1 Water supply connection

Preventing the risk of clogging or damage: *if the water pipe is new or has not been used for a long time, before connecting to the water supply check that the water is clear and free of impurities, to prevent damage to the appliance.* ***The dishwasher must always be connected to the water system with new hoses; old or used hoses must never be reused.***

CONNECTING TO THE WATER SUPPLY

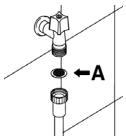

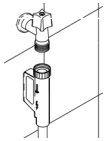

Connect the intake hose to a cold water supply with ¾" gas thread, inserting the filter **A** supplied with the dishwasher. **Take care to screw the hose firmly into place with your hands and then complete by tightening about ¼ of a turn with pliers.**
In dishwashers equipped with the ACQUASTOP device, the filters is already fitted inside the threaded ring.

The dishwasher can also be connected to a hot water supply **not exceeding 60°C**. Supplying the appliance with hot water cuts down the washing time by approximately 20 minutes, but slightly reduces its effectiveness. Make the connection to the domestic hot water supply using the same procedure described for connecting to the cold water supply.

DRAIN CONNECTION

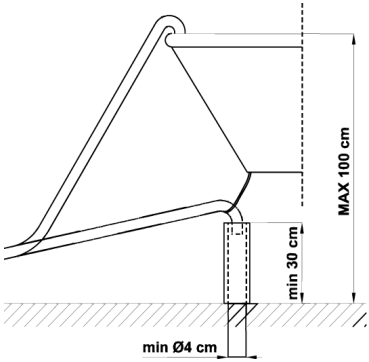

Insert the dishwasher's drain hose into a drain pipe having a diameter of at least **4 cm**, or alternatively, place it inside the kitchen sink using the plastic support provided, taking care not to crush or excessively bend the hose. It is important to prevent the hose from coming loose and falling. For this purpose, the plastic support is equipped with a hole for tying it to the wall or water tap.

The free end should be positioned at a height of between **30 and 100 cm**, and should never be submerged in water. If a horizontal drain extension hose is used (for a maximum of 3 m) the drain hose can be placed at a maximum height of **85 cm** from the ground.

2.2 Electrical connection and precautions

CHECK THAT THE VOLTAGE AND THE FREQUENCY OF THE MAINS MATCH THE RATINGS ON THE NAME PLATE OF THE APPLIANCE POSITIONED ON THE INNER EDGE OF THE DOOR.

THE PLUG ON THE SUPPLY CORD AND THE CORRESPONDING SOCKET OUTLET MUST BE OF THE SAME TYPE AND MEET THE REGULATIONS IN FORCE.
THE PLUG MUST BE ACCESSIBLE AFTER INSTALLATION.
NEVER DISCONNECT THE PLUG BY PULLING ON THE POWER SUPPLY LEAD.

DO NOT USE ADAPTORS OR SHUNT CONNECTIONS IN ORDER TO AVOID THE POSSIBILITY OF OVERHEATING OR BURNING.

In the event of damage to the supply cord, have it replaced by the manufacturer or an Authorized Technical Service Centre in order to avoid any risk.

Some components are live even with the ON/OFF button in the OFF position. Before maintenance work on the appliance, remove the plug or turn off the power supply at the wall switch.

IF THE APPLIANCE IS PROVIDED WITH A PLUGLESS SUPPLY CORD:

AN OMNIPOLAR CIRCUIT BREAKER IN OVERVOLTAGE PROTECTION CLASS **III** MUST BE INSTALLED IN AN EASILY ACCESSIBLE POSITION ON THE POWER SUPPLY LINE.

THE CONNECTION TO THE MAINS MUST BE CARRIED OUT BY A **QUALIFIED TECHNICIAN** IN ACCORDANCE TO THE SCHEME SHOWN BELOW AND THE REGULATIONS IN FORCE.

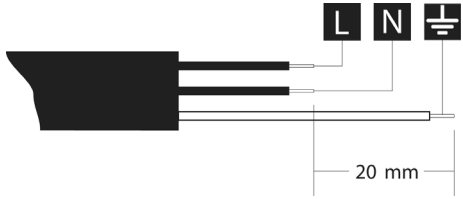

L = brown
N = blue
⏚ = yellow-green

3. Description of the controls

3.1 Upper panel

All the dishwasher controls are grouped on the upper panel. Switch-on, programming, switch-off, etc. procedures are only possible when the door is open.

1	**ON/OFF BUTTON** Pressing this button energises the appliance.
2	**SELECTED PROGRAM INDICATOR LIGHTS** Illumination of this light denotes the program selected and the occurrence of a fault (troubleshooting).
3	**PROGRAM SELECTION BUTTON** By pressing this button in sequence it is possible to select the desired program.
4	**SALT WARNIN LIGHT** (on some models only) Illumination of this light denotes a regenerating salt warning level.
5	**RINSE AID WARNING LIGHT** (on some models only) Illumination of this light signals that rinse aid dispenser is empty.
6	**QUICK TIME + EXTRA OPTION BUTTON** (see “EXTRA OPTIONS” section) The button controls selection of the quick time programs. (see table).
7	**QUICK TIME PROGRAM LIGHT** Illuminates to indicate that one of the extra programs (see table) is going to be executed.

8	**ENERSAVE OPTION + EXTRA OPTION BUTTON** (see “EXTRA OPTIONS” section) Press the button to enable/disable the option.
9	**ENERSAVE OPTION LIGHT** Illuminates to indicate that the function is activated.
10	**HALF LOAD BUTTON** Press this button to activate the half load wash option.
11	**HALF LOAD LIGHT** Illuminates to indicate that the function is activated.
12	**"Flexi Tabs" OPTION (EXTRA OPTION) LIGHT** Illuminates to indicate that the function is activated.
13	**PROGRAM DELAY BUTTON** Press this button to delay the start of the program.
14	**INFORMATION DISPLAY**

SETTING THE WASHING PROGRAM AND SWITCHING ON

After identifying the most suitable program with the aid of the programs table:

- Press the **ON/OFF** button **(1)** and wait for the **PROGRAM INDICATOR LIGHT (2)** to illuminate;
- Keep pressing the **PROGRAM SELECTION** button **(3)** until the indicator light corresponding to the desired program illuminates;
- select the option required (if any and if the model provides options);
- close the door; after about **2"** the program will start **LIGHT** will flashing (indicating that the program is being executed).

PROGRAMS TABLE

Eco

PROGRAMME NUMBER & SYMBOL	LOAD CROCKERY AND CUTLERY	PROGRAM PROGRESS	DURATION	CONSUMPTION	
			MINUTES (1)	WATER LITRES	POWER KWh (1)
1 SOAK	Pans and dishes awaiting completion of the load	Cold prewash	15	3,5	0,02
2 GLASS	Glass, china and mixed dishes with light dirt.	Wash at 45°C Cold rinse Rinse at 55°C Dry	140/ 70 **(3)**	9,5	1,10
3 ECO (*) Eco **EN 50242**	Dishes with normal dirt, even with dried-on residues	Wash at 45°C Cold rinse Rinse at 65°C Dry	**/ 136 **(3)**	**	**
4 AUTO 45-65 Auto 45°-65° **IEC/DIN*** **	Pans and dishes with normal dirt, even with dried-on residues.	When the "**AUTO**" program is selected, the dishwasher recognises the type of dirt and automatically adjusts the washing parameters as appropriate.			
5 ULTRA CLEAN 70° ****	Very dirty pans and dishes, even with dried-on residues.	Hot prewash Wash at 70°C Cold rinse **(2)** Rinse at 70°C Dry	155	15,5	1,70

The **ULTRA CLEAN** program terminate with an extra anti-bacteria rinse that ensures a further reduction in the bacteria level. If the temperature falls during this stage of the program (e.g. because the door is opened or due to a power blackout), the **program lights** flash to warn that the anti-bacteria effect is not guaranteed.

IMPORTANT: see **"NOTES AND REFERENCES"** table on the following pages.

If the dishwasher door is open or not properly closed, the washing cycle will not start.

QUICK TIME PROGRAMS
(see relevant section for explanation of functioning modes)

PROGRAMME NUMBER E SYMBOL	LOAD CROCKERY AND CUTLERY	PROGRAM PROGRESS	DURATION	CONSUMPTION	
			MINUTI (1)	WATER LITRES	POWER KWh (1)
6 RAPID 27' +QuickTime	Dishes with light dirt, washed immediately after use	Wash at 38°C Rinse at 50°C	27	6,5	0,70
7 DELICATE QUICK +QuickTime	Delicate dishes with normal dirt.	Cold prewash Wash at 50°C Cold rinse Rinse at 70°C	60	10,5	1,15
8 ECO QUICK Eco +QuickTime	Dishes with normal dirt, washed immediately after use.	Cold prewash Wash at 60°C Cold rinse Rinse at 70°C	80	12,5	1,25
9 MIX EXPRESS Auto 45°-65° +QuickTime	Dishes with normal dirt, washed immediately after use.	Cold prewash Wash at 70°C Cold rinse Rinse at 70°C	75	13	1,40
10 STRONG and FAST 70° +QuickTime	Mixed dishes with normal dirt without dried-on residues.	Wash at 65°C Cold rinse Rinse at 70°C	50	10	1,20

IMPORTANT: see **"NOTES AND REFERENCES"** table on the following pages.

If the dishwasher door is open or not properly closed, the washing cycle will not start.

NOTES AND REFERENCES	
Only run the soak program with half loads. Options **cannot** be used with the soak program. **Enersave** is activated automatically if the selected program is compatible with the option.	
*	Standard programme under **EN 50242**. The **ENERSAVE** option must **be enabled**.
**	See information sheet provided
***	**IEC/DIN** reference programme. The **ENERSAVE** option must **be enabled**.
****	Reference program for laboratories: Detergent: **20g** in the **dispenser** + **10g** in the **door** or tablet. **Configuration**: see photo in “Using the baskets”.
(1)	Program consumption and duration figures have been measured in accordance with the **EN 50242** standard. Values may vary depending on intake water and room temperatures and the type and quantity of dishes loaded.
(2)	1 or 2 cold rinses depending on the model.
(3)	ENERSAVE option selected (default)/not selected

REFERENCES for the **ENERGY LABEL** supplied with the dishwasher:

- Annual energy consumption is based on **280 standard wash cycles** with cold water and consumption of low-energy operating modes. Actual consumption depends on the way in which the appliance is used.
- Water consumption is based on **280 standard wash cycles**. Actual consumption depends on the way in which the appliance is used.
- Information refers to the **EN 50242 STANDARD** programme (identified in the programmes table), which is the most effective in terms of combined energy and water consumption. The programme is recommended for dishes with a normal level of dirt.
- Drying efficiency class on a scale from **“G”** (minimum efficiency) to **“A”** (maximum efficiency).

Notice for testing institutes
Testing institutes are provided with guidelines for comparative tests (e.g. according to EN60436).
If the form for the testing institutes is missing from the documentation, please request the guidelines by contacting us at the following e-mail address:
dishwasher@test-domestic-appliances.com
When making a request, please specify the model (MOD) and the serial number (S/N) indicated on the plate on the side of the door.

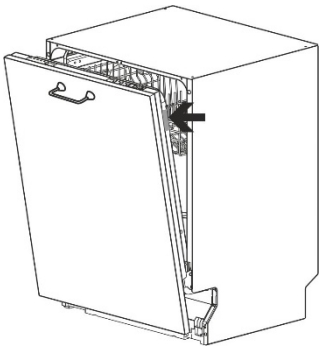

3.2 Washing programs

Before starting a washing program make sure that:

- *The water supply tap is **open**.*
- *The softener **container** contains **regenerating salt**.*
- *The **correct amount of detergent** has been added to the **dispenser**.*
- *The baskets have been **correctly loaded**.*
- *The spray arms are able to **rotate freely** and without obstruction.*
- *The dishwasher door is securely closed.*

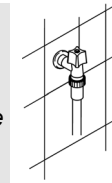

Warning:
during the initial phase of the washing program, the operation of sprayers is not perceived because they start rotating about 5 minutes after the start. This is the normal operation of the washing cycle.

OPTION SELECTION
Options are selected by pressing the relative button by the symbol of the option required; the light comes on to confirm that the option has been activated.

- **It is not possible** to select any options when the **soak program** is being used.
- All options **except "Flexi Tabs"** are **disabled** at the end of the wash cycle. To **disable the "Flexi Tabs" option, press** the relative button (the light goes out).
- All options, including **"Flexi Tabs"** are disabled when a program is **CANCELLED** after it has begun.

ADDITIONAL OPTIONS
Some models feature additional options, activated by **pressing two buttons simultaneously**. In this case, two lines in the control panel graphics link the symbol of the additional option to the two buttons to be pressed simultaneously to enable it. (e.g. **"Flexi Tabs"** in this illustration)

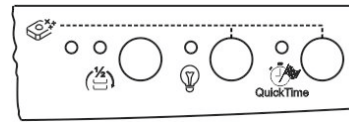

QuickTime

QUICK TIME OPTION

Select this option together with any washing program (except the soak program) to **SHORTEN** the cycle. To activate this option, press button (light comes on) after selecting the program required.
The option is automatically deactivated at the end of the program.

ENERSAVE OPTION

EnerSave

This option further **reduces energy** consumption by opening the door at the end of the cycle for more effective drying. At the end of the wash an automatic device releases the door, which slowly opens by a few centimetres. This allows optimal drying even with low rinsing temperatures, for significant **energy saving**.
The dishwasher remains in an **idle state** between the rinse stage and the end of the cycle to allow proper drying (the display shows the time left until the end of the cycle). Opening the door at this stage causes the cycle to **stop** and **ends** the program.
The program end is signalled by a short beep and the flashing of the indicator lights for programs 4 and 5.
Enersave is activated automatically if the selected program is compatible with the option. It can be deactivated before the program is started.

When the function is activated, opening of the door **must not be impeded** in any way; do not leave anything in the necessary space in front of the door to allow it to open. **Do not force the door lock** before the end of the cycle is signalled, as this would damage the mechanism.

FlexiZone

SPREAD HALF LOAD

Suitable when there are not many dishes to be washed, it saves energy and reduces the program duration. Place dishes in both baskets then load the detergent dispenser than less than the normal amount for a full load.

Flexi Tabs
Ideal for multi-function detergents, this option allows washing to be optimised, with full benefits from the combined-action tablets. When this option is activated, any salt and rinse aid in the relative containers will not be used.
With short programs, because there is less time for them to dissolve, tablets may fail to wash effectively and undissolved residues may be left. Powder detergents are more suitable for these programs.

***If the option is not provided**, we recommend the use of **conventional products** (separate detergent, salt and rinse aid), because with conventional washing cycles, combined products might create problems such as a white deposit, poor drying results and residues left on dishes.*

N.B.:
When the salt and rinse aid containers are empty, the relative lights will remain on even if the **"Flexi Tabs"** option is selected.

IMPORTANT:
when no longer required, the option must be **deactivated** by pressing the relative **button** (the light goes out).

These products **are not suitable** for use with **excessively "hard"** water. If the hardness level set is higher than **H3**, when the option is activated the relative light flashes to indicate that the product is being used incorrectly; the dishwasher **will still work**, but washing results may be **poor**.

DELAYED START
The start of the washing program can be delayed to program the dishwasher to operate at the preferred time of day (e.g. overnight). Press the **PROGRAM DELAY** button to activate the option and display a **1 hour** delay. Keep pressing to select the delay required, which may be **up to 9, 12 or 24 hours depending on the model.**
When the door is closed, the appliance will prewash the dishes, after which the "program delay" set will come into effect.

CANCELLING THE CURRENT PROGRAM

- To cancel the currently selected program open the door and hold down the **PROGRAM SELECTION (3)** button for a few seconds until the **indicator lights** for programs **4** and **5** illuminate simultaneously (marked "end").

–end–

○ ○ ○ ● ●

- Close the door.
- After approximately 1 minute the dishwasher will advance to the end of cycle.

CHANGING THE PROGRAM

To change the program in progress, simply open the door and select a new program. When the door is closed the dishwasher will automatically select the new program.

TO SAVE ON ENERGY! … AND PROTECT THE ENVIRONMENT

- *Always use the dishwasher **with a full load**.*
- *Do not wash the dishes in running water.*
- *Use the washing program that is **most appropriate** for each type of load.*
- *Do not carry out any preliminary rinsing.*
- *If available, connect the dishwasher to a hot water supply up to 60°C.*

TO CUT DOWN ON DETERGENT CONSUMPTION! … AND PROTECT THE ENVIRONMENT

The phosphates contained in dishwasher detergents are harmful to the environment. To avoid using excessive amounts of detergent and to save on electricity, observe the following:

- ***separate** the more delicate items from dishes that are more resistant to aggressive detergents and high temperatures;*
- ***do not** pour the detergent directly on the dishes.*

If the door has to be opened while washing is in progress, the program will be interrupted. The relative light will keep flashing and a beeper will signal that the cycle has not been completed. You must wait about **1 minute** before closing the door to restart the program. When the door is closed the program will continue from where it was interrupted. This operation should **only be carried out if strictly necessary**, because it might cause problems in execution of the program.

SWITCHING OFF

At the end of the program the beeper sounds briefly and the lights of programs no. **4** and **5** (marked "end") flash.

To switch off the dishwasher, open the door and press the **ON/OFF** button **(1)**.

ENERGY MANAGEMENT

After **5 minutes of waiting** (washing cycle completed, stopped or set but not started) the dishwasher switches to a **standby** state to reduce energy consumption**.**
In this state, the dishwasher indicator panel (lights or display depending on model) functions more slowly (**switch-on once** every **5 seconds**).

REMOVING THE DISHES

At the end of the washing program, wait at least **20 minutes** before removing the dishes, to allow them to cool. To ensure that any drops of water left in the top basket cannot drip onto the dishes still in the bottom basket, you are advised always to **empty the bottom basket first**.

4. Operating instructions

Once the dishwasher has been correctly installed, prepare for use as follows:

- Adjust the water softening system;
- Add the regenerating salt;
- Add the rinse aid and detergent.

4.1 Using the water softening system

The amount of scale contained in the water (water hardness index) can cause whitish staining on the dry dishes, which tend to become dull over time. The dishwasher is equipped with an automatic softening system which uses a special regenerating salt to reduce the hardness of the water.

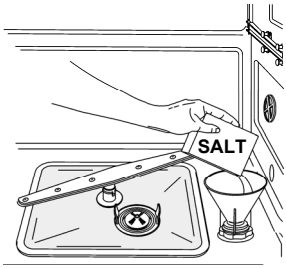

When using water of medium hardness, the regenerating salt container should be refilled after approximately **20 washing cycles**. The salt container can hold approximately **1.7 Kg** of salt in grains. The container is situated at the bottom of the dishwasher. After removing the lower basket, unscrew the salt container cap by turning it anticlockwise and pour in the salt using the funnel supplied with the dishwasher. Before replacing the cap, remove any salt residues from around the opening.

- *When using the dishwasher for the first time, in addition to the salt it is also necessary to add **one litre of water** to the container.*
- *Each time the salt container is refilled, make sure that **the cap is securely closed**. The mixture of water and detergent must never penetrate the salt container, as this would compromise the operation of the regeneration system. In the event of this occurring, the warranty will be invalidated.*
- ***Only** use regenerating salt specially formulated for domestic dishwashers. If using salt tablets, **do not fill the container completely**.*

- ***Do not use table salt*** *as it contains insoluble substances which, over time, may damage the water softening system.*
- *When necessary, refill the regenerating salt container* ***before starting the washing program****. In this way, the excess saline solution will be immediately removed by the water; the prolonged presence of salt water inside the tank may lead to* ***corrosion****.*

Be careful not to confuse the salt and detergent packages*; adding detergent to the salt container will* ***damage*** *the water softening system.*

ADJUSTING THE WATER SOFTENER

The setting can be adjusted using the **PROGRAM SELECTION BUTTON (3)**. Keep the button pressed until the **WATER HARDNESS ADJUSTMENT INDICATOR LIGHT (4)** flashes. The **SELECTED PROGRAM INDICATOR LIGHTS (2)** indicate the current setting. Each press of the button modifies the setting according to the sequence in the following table:

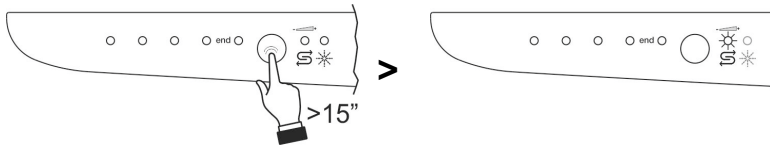

After carrying out the adjustment or displaying the current setting, if you do not touch the button for a few seconds the dishwasher will automatically exit from adjustment mode and return to the standard operating mode.

WATER HARDNESS TABLE

WATER HARDNESS		SETTINGS		
German degrees (°dH)	French degrees (°dH)			
0 – 6	0 – 11	**H0**	All lights off (no salt)	○ ○ ○ ○ ○ end
7 – 10	12 – 18	**H1**	One light on	● ○ ○ ○ ○ end
11 – 15	19 – 27	**H2**	Two lights on	● ● ○ ○ ○ end
16 – 21	28 – 37	**H3**	Three lights on	● ● ● ○ ○ end
22 – 28	38 – 50	**H4**	Four lights on	● ● ● ● ○ end
29 - 50	51 – 90	**H5**	Five lights on	● ● ● ● ● end

Contact your local water board for information on the hardness of your water supply.
Default settings: **H3 - 16-21°dH** – **28-37°dF**

4.2 Using the rinse aid and detergent dispensers

The detergent and rinse aid dispensers are situated on the inner part of the door: the **detergent dispenser** is on the left, and the **rinse aid dispenser** is on the right.

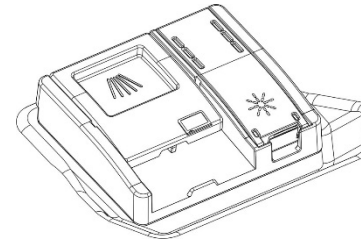

*With the exception of the **SOAK** program, before every washing cycle it is necessary to add the required amount of detergent to the **detergent dispenser**. The rinse aid, on the other hand, should only be added as required.*

ADDING THE RINSE AID

The rinse aid helps the dishes dry faster and prevents the formation of scale deposits and staining; it is automatically added to the water during the final rinse cycle, from the container situated on the inner side of the door.

To add rinse aid:

- Open the dispenser by pressing and lifting the tab on the cover.
- Fill the dispenser with rinse aid. Top up again when the rinse aid indicator light turns on.
- Close the cover, a click indicates when it is closed.
- Use a cloth to remove any spillage of rinse aid which might lead to the formation of excess foam.

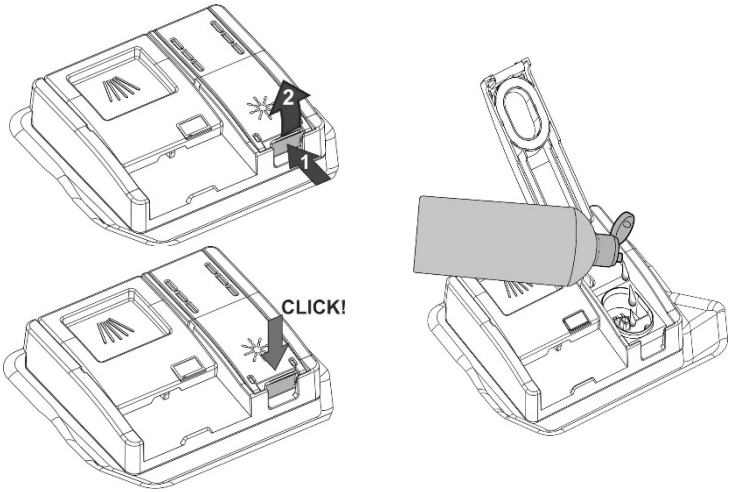

ADJUSTING THE RINSE AID DISPENSER MODE

Press and hold the **PROGRAM SELECTION button (3),** after about 15" the salt indicator flashes; keep still pressed until the **RINSE AID DISPENSER MODE INDICATOR LIGHT (5)** flashes and the **SELECTED PROGRAM LIGHTS (2)** indicate the current setting.
Press several times to choose the desired dosage according to the following table:

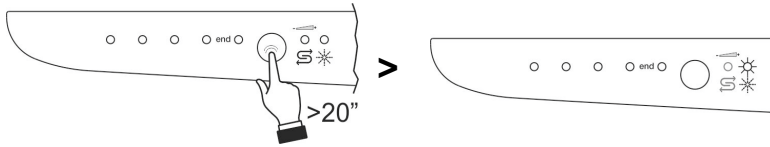

After carrying out the adjustment or displaying the current setting, if you do not touch the button for a few seconds the dishwasher will automatically exit from adjustment mode and return to the standard operating mode.

RINSE AID ADJUSTMENT TABLE			
0 – not dispensed	**b0**	All indicator lights off	○ ○ ○ ○ ○ (end)
Minimum. 2 ml	**b1**	One indicator light on	● ○ ○ ○ ○ (end)
3 ml	**b2**	Two indicator lights on	● ● ○ ○ ○ (end)
4 ml	**b3**	Three indicator lights on	● ● ● ○ ○ (end)
5 ml	**b4**	Four indicator lights on	● ● ● ○ ○ (end)
Maximum. 6 ml	**b5**	Five indicator lights on	● ● ● ● ● (end)

Default settings: **b4 - 5 ml**

- *The amount of rinse aid must be **increased** if the washed dishes appear dull or feature circular stains.*
- *If, on the other hand, the dishes are sticky or have white streaks, it is necessary to **reduce** the rinse aid setting.*

ADDING THE DETERGENT

To open the detergent dispenser cover, lightly press button **P**. Add the detergent or tablet and close the cover by sliding it until it stops, indicated by a click.
The dispenser will open automatically during the wash cycle.
Only add the detergent (also in tablet form) if the dispenser is dry

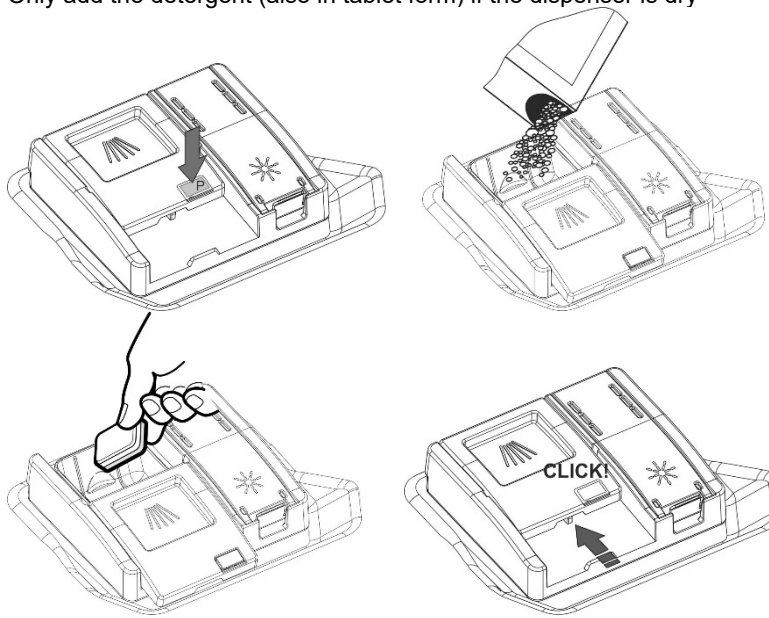

- *When a program with hot prewash is selected (see program table), extra detergent must be placed in the cavity **G/H** (depending on models).*
- *Use **only** detergents specially formulated for dishwashers.*
- *The detergent packs must be sealed and stored in a dry place to prevent the formation of lumps which may negatively affect washing results. Once opened the detergent packs should not be kept for too long, otherwise the detergent loses its effectiveness.*
- *Do not use detergents for washing dishes by hand because they may affect the operation of the dishwasher.*
- *Add the correct amount of detergent. An insufficient amount of detergent will result in a partial removal of dirt from the dishes, whereas an excessive amount is wasteful and does not improve the washing results.*
- *For the safeguarding of the environment we recommend the use of **phosphate- and chlorine free** detergents.*

The introduction of detergent into the rinse aid dispenser, even in liquid form, will damage the dishwasher.

4.3 General warnings and recommendations

Before using the dishwasher for the first time, it is advisable to read the following recommendations concerning dish types to be washed and their loading.
There are generally no constraints on the washing of domestic dishes, but in certain cases it is necessary to take their characteristics into account.

Before loading the dishes into the baskets it is necessary to:

- *remove coarse food remains: e.g. bones, fish-bones, etc. which may clog the filter or damage the wash pump.*
- *soak any pots or pans with burnt-on food remains on the bottom to facilitate removal, then load them into the LOWER BASKET.*

There is no need to pre-wash the dishes under running water before loading them into the baskets since this only wastes water.

Correct loading of the dishes helps ensure optimal washing results.

WARNING!

- *Make sure that the dishes are securely in place so that they cannot tip over or obstruct the rotation of the spray arms during the washing cycle.*
- *Do not place very small objects in the baskets as these could fall and obstruct the spray arms or the wash pump.*
- *Containers such as cups, bowls, glasses and pots should always be loaded with the opening facing downwards and with any cavities at an angle, to allow the water to drain out.*
- *Do not stack dishes or place them in such a way that they cover one other.*
- *Do not place glasses too close together because they may knock against each other and break, or there might be staining at the point where they touch.*

MAKE SURE that the items being washed are dishwasher-safe.

Items which are not dishwasher-safe:

- ***Wooden dishes, pots or pans:*** *these may be damaged by the high washing temperatures.*
- ***Handcrafted items:*** *these are rarely suitable for washing in a dishwasher. The relatively high water temperatures and the detergents used may damage them.*
- ***Plastic dishes:*** *heat resistant plastic dishes must be washed in the upper basket.*
- ***Dishes and objects in copper, tin, zinc or brass:*** *these tend to stain.*
- ***Aluminium dishes:*** *items made from anodised aluminium may lose their colour.*
- ***Silverware:*** *silver items may stain.*
- ***Glass and crystal:*** *in general, glass and crystal objects can be washed in the dishwasher. However, certain types of glass and crystal may become dull and lose their clearness after many washings. Therefore, for these items we recommend using the least aggressive program available.*
- ***Decorated items:*** *the decorated objects available on the market are generally able to withstand washing in the dishwasher, although the colours may fade after a great many washes. If in doubt as to the fastness of the colours, it is advisable to wash just a few items at a time for approximately one month.*

4.4 Using the baskets

The dishwasher has a capacity of **13 place-settings**, including serving dishes.

LOWER BASKET

The lower basket receives the full force of the lower spray arm, and should therefore be used for the “toughest” items with a heavier degree of soiling.

All types and combinations of loads are permitted, provided that the dishes, pots and pans are arranged with all the soiled surfaces exposed to the water jets coming from the bottom.

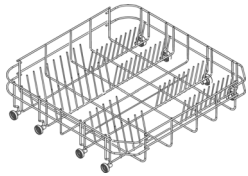

With fixed supports

To make the most of the space inside the basket when loading large items, certain models are equipped with tip-up supports for plates in 2 or 4 sections.

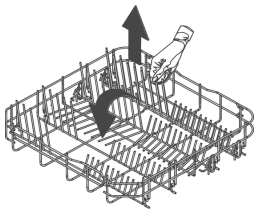

With tip-up supports

BOTTOM BASKET INSERTS

Some models are equipped with bottom basket inserts which improve the drying of dishes. The inserts are supplied in the accessories bag; to use them, simply fit them into place as shown.

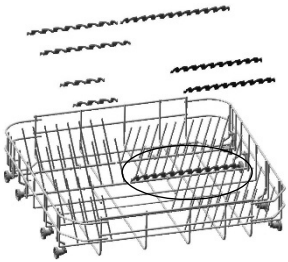

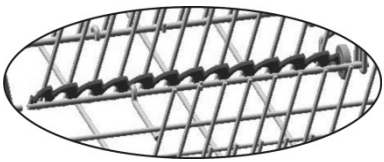

LOADING THE LOWER BASKET

Carefully load flat plates, soup plates, dessert and serving dishes, positioning them vertically. Pots, pans and their covers must be loaded upside down. When loading soup plates and dessert bowls, be sure to leave a gap between them.

Loading examples:

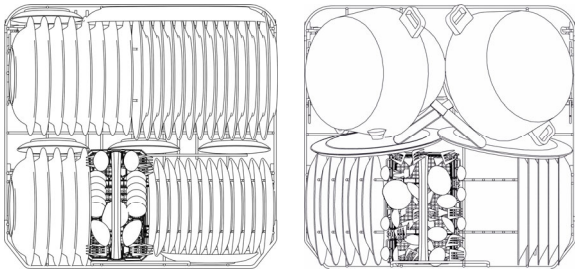

UPPER BASKET

The upper basket should be loaded with small or medium-sized items such as glasses, small plates and saucers, tea or coffee cups, shallow bowls and light objects. If the upper basket is used in the lowermost position, it can also be loaded with serving dishes, provided they are only lightly soiled.

LOADING THE UPPER BASKET

Load plates facing forward; cups, bowls etc. must always be facing downwards. The left side of the basket can be loaded with cups and glasses on two levels. In the centre section, plates and saucers can be loaded vertically into the supports provided.

Loading examples:

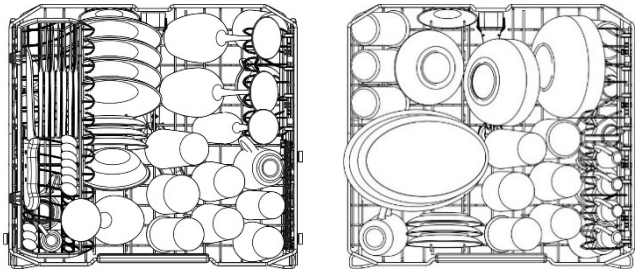

CUTLERY BASKET

The basket is suitable for all types of cutlery, except long items that may **interfere** with the upper spray arm. The cutlery should be arranged in the spaces in the upper racks to allow the water to pass effectively between the items.

Forks and spoons should be positioned with the **handle facing downwards**, taking care not to injure yourself with the prongs of the forks.

Knives should be placed in the tray on the upper rack or in the cutlery drawer, if present (depending on the model), otherwise position them with the **handles facing upwards**.

Ladles, wooden spoons and kitchen knives can be placed on the upper rack, **making sure that the blades of the knives do not protrude from the basket.** The upper racks can be opened in order to insert, for example, small items.

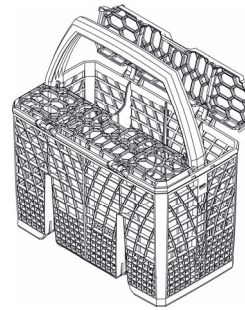

The cutlery basket slides across the dishwasher and can be **placed in any position** to allow optimal use of the space in the bottom basket.

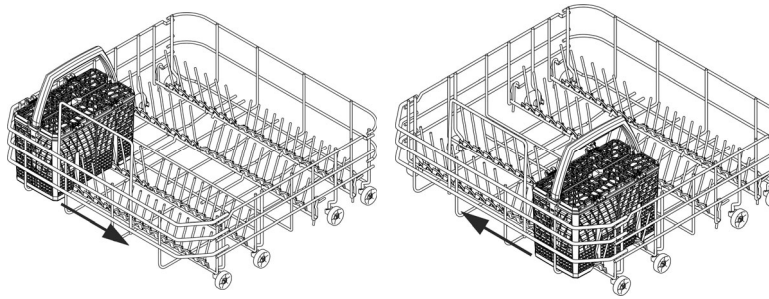

FLEXI DUO TOP RACK (on some models only)

This comprises **two independent** sliding, pull-out tray racks for easier loading/unloading of cutlery. Various loading systems and configurations are possible. For example, **tea cups** can be loaded with the **right-hand** rack set in the **low position,** while the left-hand rack or both can be removed to allow l**arge dishes** to be put in the **top basket.**

In order to position the right hand basket in a low position, the upper basket has to be adjusted so that it is in the lowest position (see “adjusting the upper basket).

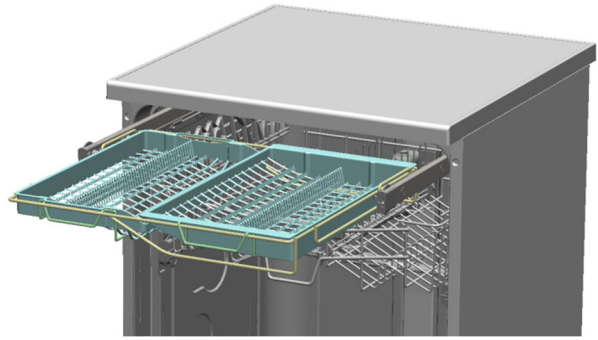

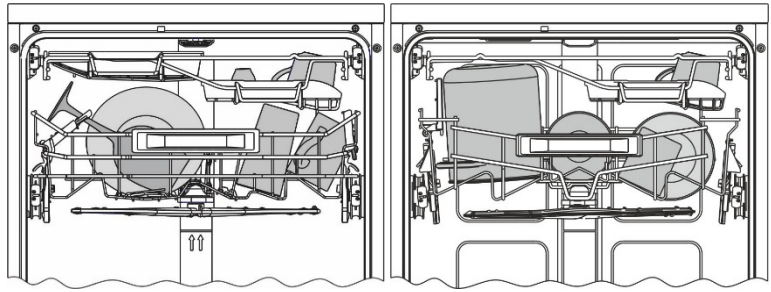

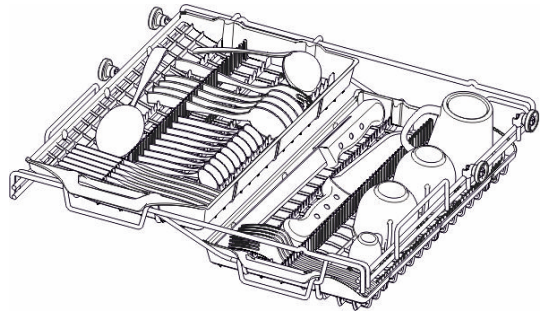

EXAMPLES OF LOADING FOR INTENSIVE DIRT

13 Standard place setting

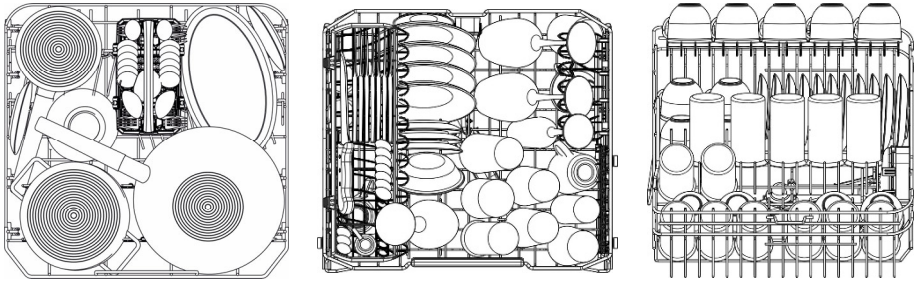

If the bottom basket inserts are of the fold-down type, they should be laid flat for easier loading.

13 Standard place setting
FLEXI DUO TOP RACK (on some models only)

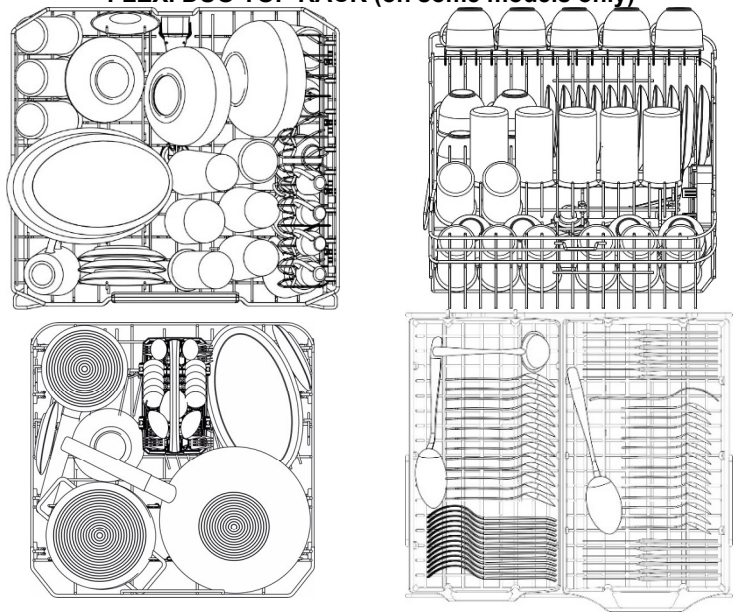

If the bottom basket inserts are of the fold-down type, they should be laid flat for easier loading.

UPPER BASKET EQUIPMENT
(depending on the model)

Cutlery tray
For knives, spoons (tea and dessert) and long objects. The ends are designed to hold long stemmed glasses.
- It can be removed by pressing and pushing the release levers **(B)** at the same time.
- It has to be lowered if the upper basket is in the topmost position. Press the catches **(G)** simultaneously.

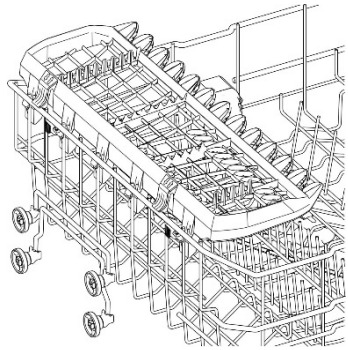

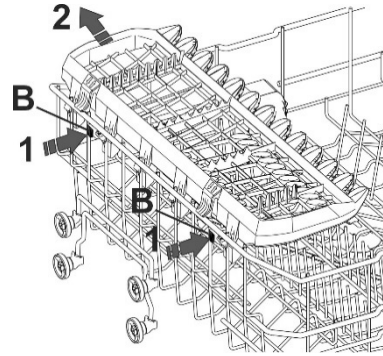

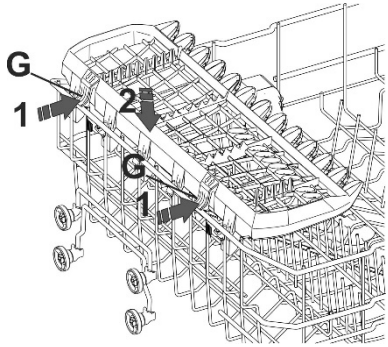

Fold-down shelves

For mugs, cups and long objects. The ends are designed to hold long stemmed glasses

When not used they can be moved to a vertical position (until a click is heard).

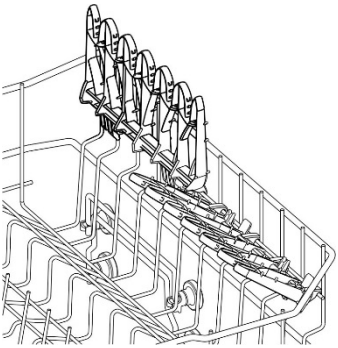

Shelves with expandable wings

For small objects, mugs and cups.

They can be used either closed or open (pull the upper, sliding part). To close them, press the release device (S) and slide them downwards.

The ends are designed to hold long stemmed glasses (even when closed).

When not used they can be moved to a vertical position (until a click is heard).

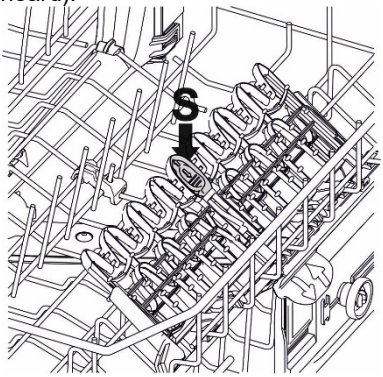

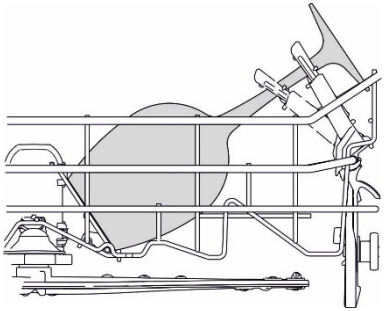

Fold-down tines

These can be secured in a vertical position, resting on the bottom of the basket if unused, or placed in an intermediate position, as required.
The single tine on the right is ideal for supporting long stemmed glasses.

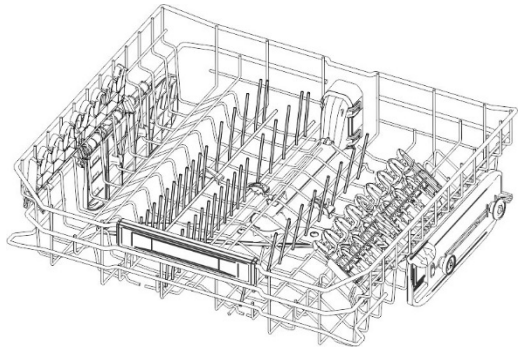

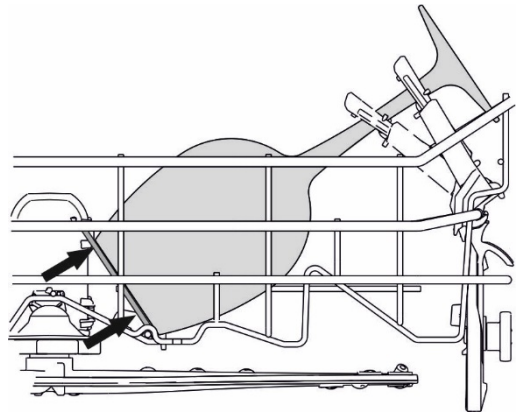

ADJUSTING THE UPPER BASKET

The height of the top basket can be adjusted to allow large dishes or pans to be placed in the bottom basket.

The adjustment procedure may be type **A** or **B**, depending on the dishwasher model purchased.

Version A: pull-out with adjustment in **two positions.**

- Pull out both the basket guides.
- Remove the stops, first releasing them as shown in the diagram.
- Pull out the basket.
- Fit the upper or lower pair of wheels into the guide, depending on the setting required;
- Return the stops to their original position**.**

The left hand and right hand sides of the basket **must always be set at the same height**.

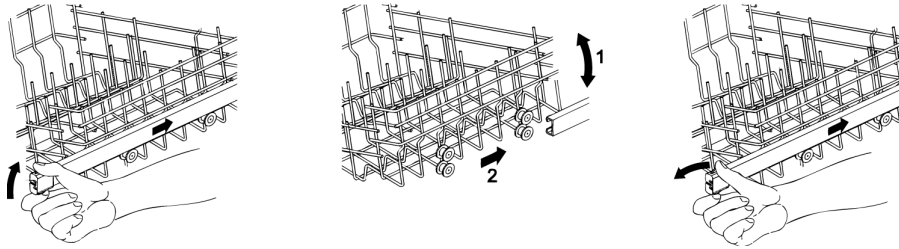

Version B: with adjustment in **three positions** on both sides.

The sides of the basket **must always be set at the same height**.

- Raise the basket by pulling on the top edge **(1)**, to the first or second catch depending on the height required.
- To lower the basket, first release it by pulling the release lever **(2)**.

Adjustment is also possible with the basket loaded, but in this case when lowering the basket it should be held steady with one hand to avoid knocking the dishes.

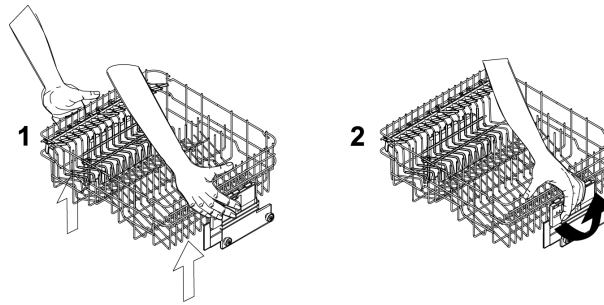

5. Cleaning and maintenance

Before carrying out any work, always unplug the appliance from the electrical supply or switch off the all-pole disconnection device.

5.1 General warnings and recommendations

Avoid the use of acidic or abrasive detergents.

Clean the outer surfaces and door-lining of the dishwasher regularly using a soft cloth moistened with water or with a normal detergent suitable for painted surfaces. Clean the door gaskets with a damp sponge. Periodically (once or twice a year) it is advisable to clean the tank and gaskets, using a soft cloth and water to remove any deposits.

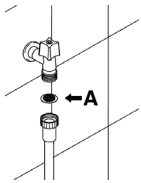

CLEANING THE WATER INTAKE FILTER
The water intake filter **A** located at the outlet of the water supply tap needs to be cleaned periodically.
After having closed the water supply tap, unscrew the end of the water intake hose, remove the filter **A** and clean it delicately under running water. Reassemble filter **A** in its seat and carefully screw the water intake hose back into position.

CLEANING THE SPRAY ARMS
The spray arms can be easily removed for periodic cleaning of the nozzles, to prevent possible clogging. Wash them under running water and carefully replace them in their seats, **checking that their rotary movement is in no way impeded**.

- To remove the **upper** spray arm, unscrew locking ring **R**.

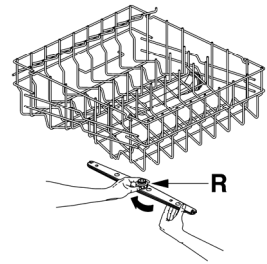

- To remove the **lower** spray arm, simply lift it up, pulling by the central part.
- To remove the **orbital** spray arm assembly, take hold of the longer arm and pull the orbital unit upward. Wash the arms under a jet of running water and return them carefully to their seat. **After reassembly, check that the spray arms turn freely.** Otherwise, check that they have been installed correctly.
- To remove and clean the **planetarium** sprayer follow the instructions provided.

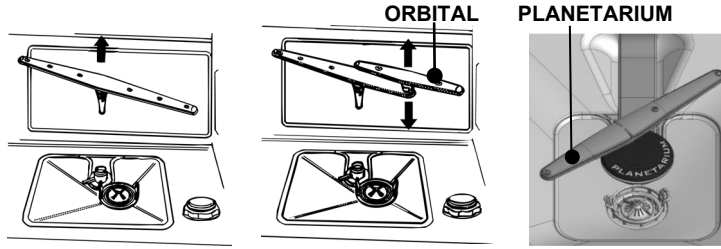

CLEANING THE FILTER UNIT

- It is advisable to periodically inspect the centre filter **C** and, if necessary, to clean it. To remove the filter, grip the tabs, turn them anticlockwise and lift upwards;
- push the centre filter **D** from the underside to remove it from the micro-filter:
- separate the two parts which make up the plastic filter by pressing the body of the filter in the zone shown by the arrows;
- remove the centre filter by lifting it upwards.

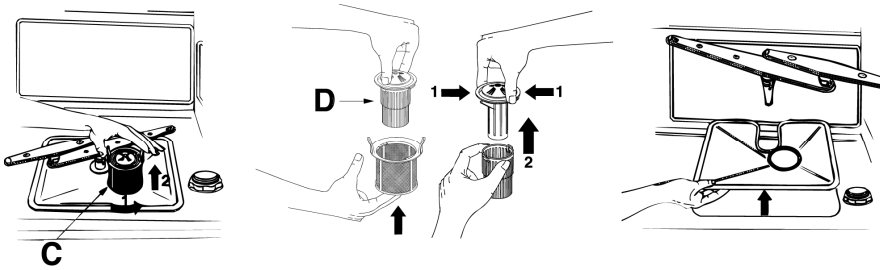

CLEANING THE FILTER UNIT (models with planetarium sprayer**)**

- It is advisable to periodically inspect the centre filter and, if necessary, to clean it.
- remove the planetarium sprayer follow the instructions provided.
- push the centre filter **D** from the underside to remove it from the micro-filter:
- separate the two parts which make up the plastic filter by pressing the body of the filter in the zone shown by the arrows;
- remove the centre filter by lifting it upwards.

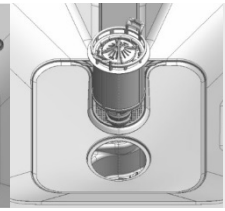
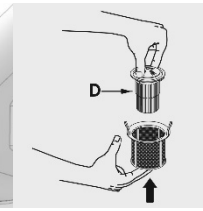

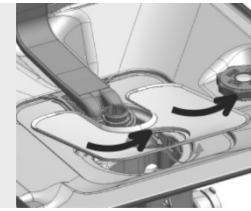

GENERAL WARNINGS AND RECOMMENDATIONS FOR CORRECT MAINTENANCE:

- *The filters should be cleaned **under running water** using a stiff brush.*
- ***When removing the filter**, take care that there are no food residues on it. If any residues fall into the washing pit they might block hydraulic components, or foul the spray arm nozzles.*
- *It is essential to **thoroughly clean the filters** according to the above instructions: the dishwasher cannot function if the filters are clogged.*
- ***Carefully replace** the filters in their seats, to avoid damaging the wash pump.*

PROLONGED DISUSE:

- *Run the soak program twice in succession.*
- ***Unplug** the power cord from the socket.*
- ***Leave the door slightly open**, in order to prevent the formation of unpleasant odours inside the washing tank.*
- ***Fill the rinse aid dispenser**.*
- ***Shut off the water supply tap.***

BEFORE STARTING THE DISHWASHER AFTER PROLONGED DISUSE:

- *Check that there are no deposits of sludge or rust inside the water pipe: if there are, allow the water to run from the water supply tap for a few minutes.*
- ***Plug the power cord** back into the socket.*
- ***Reconnect the water intake hose and open the tap again.***

TROUBLESHOOTING MINOR PROBLEMS

In some cases it is possible to remedy minor problems by referring to the following instructions:

If the program fails to start, check that:

- *the dishwasher is connected to the electrical power supply;*
- *there is no power failure;*
- *the water tap is open;*
- *the dishwasher door is properly closed.*
- *the door does not close:*
  - the lock has been triggered; close the door with greater force
  - regulate the catch of the lock on the door to its maximum adjustment using the central plastic screw.

If water remains inside the dishwasher, check that:

- *the drain hose is not kinked;*
- *the drain siphon is not obstructed;*
- *the dishwasher filters are not clogged.*

If the dishes are not being cleaned properly, check that:

- *the correct amount of detergent has been added;*
- *there is regenerating salt inside the special container;*
- *the dishes are being loaded correctly;*
- *the selected program is suitable for the dish types and their degree of soiling;*
- *all the filters are clean and positioned correctly;*
- *the spray arm nozzles are not obstructed;*
- *there is no object obstructing the rotation of the spray arms.*

If the dishes fail to dry or remain dull, check that:

- *there is rinse aid inside the special container;*
- *the rinse aid dispenser setting is correct;*
- *the detergent used is of good quality and has not lost its effectiveness (for example, through incorrect storage, with the box left open).*
- *Non-dry synthetic dishes. Synthetic material has a lower heat storage capacity and is therefore harder to dry.*

If the dishes show signs of streaking, staining, etc., check that:

- *the rinse aid dispenser setting is not too high.*

If there are visible traces of rust inside the tank:

- *the tank is made of steel, and therefore any rust marks are due to external elements (fragments of rust from the water pipes, pots, cutlery, etc.). Special products are commercially available to remove such marks;*
- *check that the amount of detergent being used is correct. Certain detergents can be more corrosive than others.*
- *check that the cap of the salt container is securely closed, and that the water softening setting is correct.*

If the door does not close:

1 - Check the position of the door lock catch **(D)**

2 - **If necessary**, raise it by adjusting the plastic screw **(V)** next to the catch.

3 - Check the condition of the lock hook; if it has not triggered (reference **N**), the door opens and closes normally. **If it has triggered** (reference **S**), close the door with force until it resets; open and close the door.

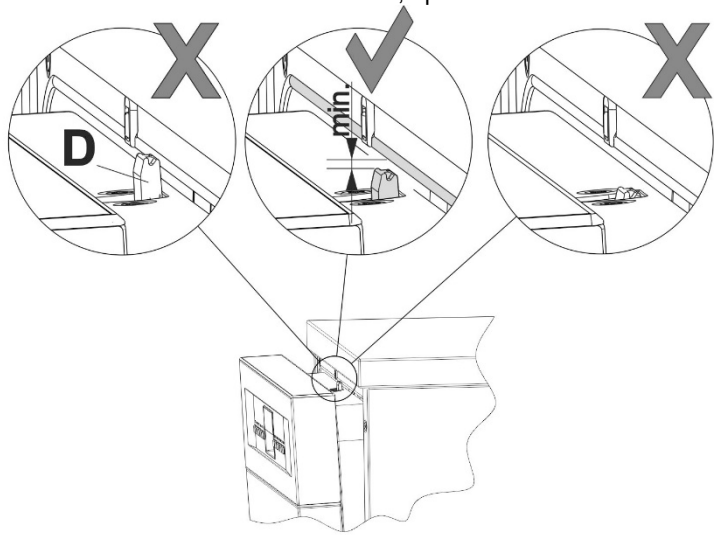

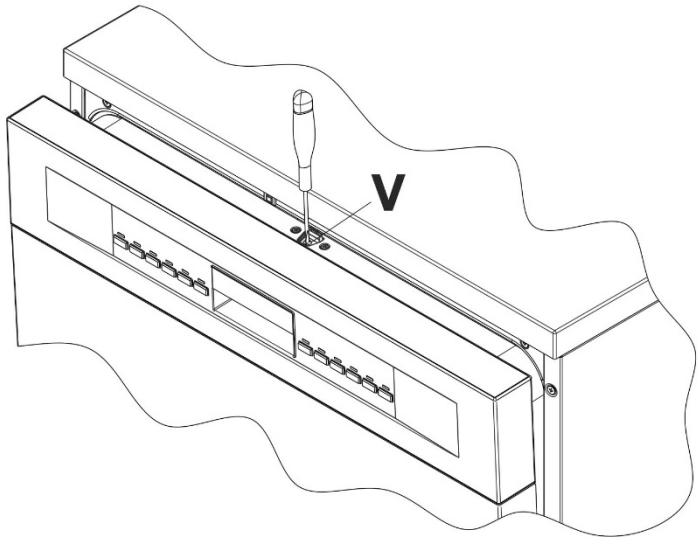

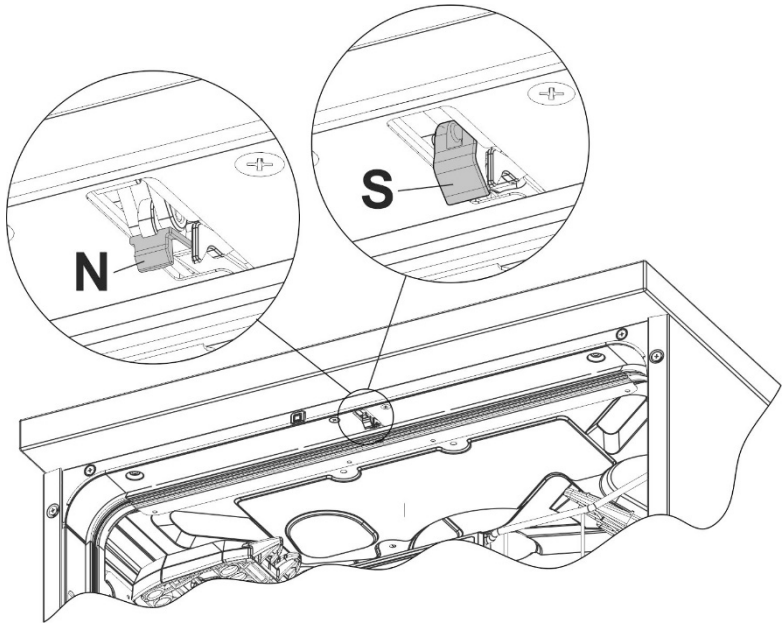

If after following the above troubleshooting instructions the problem persists, call the nearest After-Sales Centre.

WARNING: any operations performed on the appliance by unauthorised persons are not covered by the warranty and shall be paid for by the user.

6. Troubleshooting

The dishwasher is capable of signalling a number of faults through the simultaneous illumination of several indicator lights, with the following meanings:

FAULT						DESCRIPTION
E1	☼	○	○	○	●	**Acquastop failure** The anti-flooding system has been activated (for the relevant models only). The system is tripped in case of water leaks. Contact the after-sales service.
E2	○	☼	○	○	●	**Safety level** The system which limits the water level inside the dishwasher has been tripped. Interrupt the program and switch off the dishwasher. Switch the dishwasher back on, program it again and start the washing cycle. If the problem persists, contact the after-sales service.
E3	☼	☼	○	○	●	**Water heating malfunction** The water is not heated or the heating parameters are not correct. Repeat the washing program; if the problem persists, contact the after-sales service.
E4	○	○	☼	○	●	**Water temperature monitoring malfunction** Interrupt the program and switch off the dishwasher. Switch the dishwasher back on, program it again and start the washing cycle. If the problem persists, contact the after-sales service.
E5	☼	○	☼	○	●	**Water intake malfunction** The appliance does not take in water or does not do so correctly. Check that the water connections are correct, the water intake tap is turned on and the filter is not fouled. If the problem persists, contact the after-sales service.
E6	○	☼	☼	○	●	**Water pump-out malfunction** The appliance does not pump out the water or does not do so correctly. Check that the drain hose is not kinked or crushed and that the siphon and filter are not fouled. If the problem persists, contact the after-sales service.

FAULT						DESCRIPTION
E7	☼	☼	☼	○	●	**Turbine flow-regulator malfunction** (for the relevant models only) The appliance is not able to "measure" the amount of water loaded accurately. Interrupt the program and switch off the dishwasher. Switch the dishwasher back on, program it again and start the washing cycle. If the problem persists, contact the after-sales service.
E8	○	○	○	☼	●	**Alternate washing system malfunction** Interrupt the program and switch off the dishwasher. Switch the dishwasher back on, program it again and start the washing cycle. If the problem persists, contact the after-sales service.
E9	☼	○	○	☼	●	**Water intake system malfunction** Contact the after-sales service.
E11	☼	☼	○	☼	●	Wash motor pump does not work

○ **Light off** ● **Light on** ☼ **Light flashing**

If an alarm occurs the appliance interrupts the program in progress and signals a fault.

- Alarms **E1, E2, E3, E4, E8** and **E9** interrupt the current program immediately.
- The **E5**, **E6** alarms interrupts the running program once the cause is resolved, it will bring bach the execution of the program.
- The alarm **E7** is visualized at the end of the cycle that comes, however, brought to the end since the operation of the dishwasher is not harmed.
- **E11:** Contact the after-sales service.

To “reset” an alarm is necessary:

- Open and close the door, or turn off and on the machine. At this point is possible to program the dishwasher again.

If the malfunction persists, contact your authorised Service Centre.