CONTENTS

Safety information	16	Hints and tips	23
Safety instructions	17	Care and cleaning	24
Installation	19	Troubleshooting	25
Operation	20	Technical data	28
Daily use	21		

Subject to change without notice.

⚠ SAFETY INFORMATION

Before the installation and use of the appliance, carefully read the supplied instructions. The manufacturer is not responsible for any injuries or damages that are the result of incorrect installation or usage. Always keep the instructions in a safe and accessible location for future reference.

Children and vulnerable people safety

- This appliance can be used by children aged from 8 years and above and persons with reduced physical, sensory or mental capabilities or lack of experience and knowledge if they have been given supervision or instruction concerning the use of the appliance in a safe way and understand the hazards involved.
- This appliance may be used by children between 3 and 8 years of age and persons with very extensive and complex disabilities, if they have been properly instructed.
- Children of less than 3 years of age should be kept away unless continuously supervised.
- Do not let children play with the appliance.
- Children shall not carry out cleaning and user maintenance of the appliance without supervision.
- Keep all packaging away from children and dispose of it appropriately.

General Safety

- This appliance is intended to be used in household and similar applications such as:

- Farm houses; staff kitchen areas in shops, offices and other working environments
- By clients in hotels, motels, bed and breakfast and other residential type environments

- WARNING: Keep ventilation openings, in the appliance enclosure or in the built-in structure, clear of obstruction.
- WARNING: Do not use mechanical devices or other means to accelerate the defrosting process, other than those recommended by the manufacturer.
- WARNING: Do not damage the refrigerant circuit.
- WARNING: Do not use electrical appliances inside the food storage compartments of the appliance, unless they are of the type recommended by the manufacturer.
- Do not use water spray and steam to clean the appliance.
- Clean the appliance with a moist soft cloth. Only use neutral detergents. Do not use abrasive products, abrasive cleaning pads, solvents or metal objects.
- Do not store explosive substances such as aerosol cans with a flammable propellant in this appliance.
- If the supply cord is damaged, it must be replaced by the manufacturer, its Authorised Service Centre or similarly qualified persons in order to avoid a hazard.

SAFETY INSTRUCTIONS

Installation

⚠ **WARNING!** Only a qualified person must install this appliance.

- Remove all the packaging and the transit bolts.
- Do not install or use a damaged appliance.
- Follow the installation instructions supplied with the appliance.
- Always take care when moving the appliance as it is heavy. Always use safety gloves and enclosed footwear.
- Make sure the air can circulate around the appliance.
- At first installation or after reversing the door wait at least 4 hours before connecting the appliance to the power supply. This is to allow the oil to flow back in the compressor.
- Before carrying out any operations on the appliance (e.g. reversing the door), remove the plug from the power socket.
- Do not install the appliance close to radiators or cookers, ovens or hobs.
- Do not expose the appliance to the rain.
- Do not install the appliance where there is direct sunlight.
- Do not install this appliance in areas that are too humid or too cold.

- When you move the appliance, lift it by the front edge to avoid scratching the floor.
- The appliance contains a bag of desiccant. This is not a toy. This is not food. Please dispose of it immediately.

Electrical connection

WARNING! Risk of fire and electric shock.

WARNING! When positioning the appliance, ensure the supply cord is not trapped or damaged.

WARNING! Do not use multi-plug adapters and extension cables.

- The appliance must be earthed.
- Make sure that the parameters on the rating plate are compatible with the electrical ratings of the mains power supply.
- Always use a correctly installed shockproof socket.
- Make sure not to cause damage to the electrical components (e.g. mains plug, mains cable, compressor). Contact the Authorised Service Centre or an electrician to change the electrical components.
- The mains cable must stay below the level of the mains plug.
- Connect the mains plug to the mains socket only at the end of the installation. Make sure that there is access to the mains plug after the installation.
- Do not pull the mains cable to disconnect the appliance. Always pull the mains plug.

Use

WARNING! Risk of injury, burns, electric shock or fire.

- Do not change the specification of this appliance.
- Do not put electrical appliances (e.g. ice cream makers) in the appliance unless they are stated applicable by the manufacturer.
- Be careful not to cause damage to the refrigerant circuit. It contains isobutane (R600a), a natural gas with a high level of environmental compatibility. This gas is flammable.
- If damage occurs to the refrigerant circuit, make sure that there are no flames and sources of ignition in the room. Ventilate the room.
- Do not let hot items to touch the plastic parts of the appliance.
- Do not put soft drinks in the freezer compartment. This will create pressure on the drink container.
- Do not store flammable gas and liquid in the appliance.
- Do not put flammable products or items that are wet with flammable products in, near or on the appliance.
- Do not touch the compressor or the condenser. They are hot.
- Do not remove or touch items from the freezer compartment if your hands are wet or damp.
- Do not freeze again food that has been thawed.
- Obey the storage instructions on the packaging of frozen food.

Internal lighting

WARNING! Risk of electric shock.

- The type of lamp used for this appliance is for household appliances only. Do not use it for house lighting.

Care and cleaning

WARNING! Risk of injury or damage to the appliance.

- Before maintenance, deactivate the appliance and disconnect the mains plug from the mains socket.
- This appliance contains hydrocarbons in the cooling unit. Only a qualified

person must do the maintenance and the recharging of the unit.
- Regularly examine the drain of the appliance and if necessary, clean it. If the drain is blocked, defrosted water collects in the bottom of the appliance.

Service

- To repair the appliance contact an Authorised Service Centre.
- Use original spare parts only.

Disposal

WARNING! Risk of injury or suffocation.

- Disconnect the appliance from the mains supply.
- Cut off the mains cable and discard it.
- Remove the door to prevent children and pets to be closed inside of the appliance.
- The refrigerant circuit and the insulation materials of this appliance are ozone-friendly.
- The insulation foam contains flammable gas. Contact your municipal authority for information on how to discard the appliance correctly.
- Do not cause damage to the part of the cooling unit that is near the heat exchanger.

INSTALLATION

Location

Refer to the assembly instructions for the installation.

To ensure best performance, install the appliance well away from sources of heat such as radiators, boilers, direct sunlight etc. Make sure that air can circulate freely around the back of the cabinet.

Positioning

Install the appliance in a dry, well ventilated indoors where the ambient temperature corresponds to the climate class indicated on the rating plate of the appliance.

Cli-mate class	Ambient temperature
SN	+10°C to + 32°C
N	+16°C to + 32°C
ST	+16°C to + 38°C
T	+16°C to + 43°C

Some functional problems might occur for some types of models when operating outside of that range. The correct operation can only be guaranteed within the specified temperature range. If you have any doubts regarding where to install the appliance, please turn to the vendor, to our customer service or to the nearest Authorised Service Centre.

Electrical connection

- Before plugging in, ensure that the voltage and frequency shown on the rating plate correspond to your domestic power supply.
- The appliance must be earthed. The power supply cable plug is provided with a contact for this purpose. If the domestic power supply socket is not earthed, connect the appliance to a separate earth in compliance with current regulations, consulting a qualified electrician.
- The manufacturer declines all responsibility if the above safety precautions are not observed.

- This appliance complies with the E.E.C. Directives.

Ventilation requirements

The airflow behind the appliance must be sufficient.

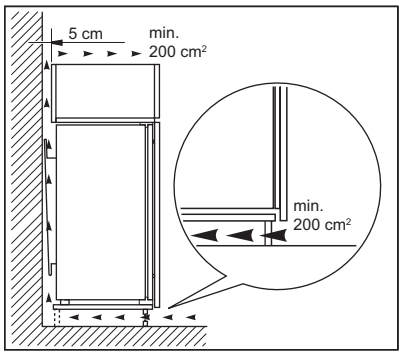

CAUTION! Refer to the assembly instructions for the installation.

OPERATION

Control panel

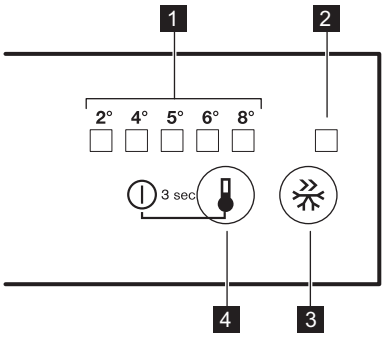

1 Temperature indicator LED
2 FastFreeze indicator LED
3 FastFreeze button
4 Temperature regulator ON/OFF button

Switching on

1. Insert the plug into the wall socket.
2. Touch the temperature regulator button if all LED indicators are off.

Switching off

Keep touching the temperature regulator button for 3 seconds.
All indicators light off.

Temperature regulation

To operate the appliance, touch the temperature regulator until the LED corresponding to the required temperature lights up. Selection is progressive, varying from 2°C to 8°C.

Coldest setting: +2°C.
Warmest setting: +8°C.
A medium setting is generally the most suitable.

Choose the setting keeping in mind that the temperature inside the appliance depends on:

- room temperature
- frequency of opening the door
- quantity of food stored
- appliance location.

1. Touch temperature regulator.
Current temperature indicator blinks. Any time you touch the temperature regulator, the setting moves by one position. The corresponding LED blinks for a while.

2. Touch the temperature regulator until the required temperature is selected.

FastFreeze function

You can activate FastFreeze function by pressing the FastFreeze button.

The LED corresponding to the symbol FastFreeze indicator lights up.

You can deactivate FastFreeze function by pressing the FastFreeze button again.

The FastFreeze indicator will light off.

This function stops automatically after 28 hours.

DAILY USE

WARNING! Refer to Safety chapters.

Cleaning the interior

Before using the appliance for the first time, the interior and all internal accessories should be washed with lukewarm water and some neutral soap to remove the typical smell of a brand-new product, then dried thoroughly.

CAUTION! Do not use detergents, abrasive powders, chlorine or oil-based cleaners as they will damage the finish.

Positioning the door shelves

To permit storage of food packages of various sizes, the door shelves can be placed at different heights.

1. Gradually pull the shelf up until it comes free.
2. Reposition as required.

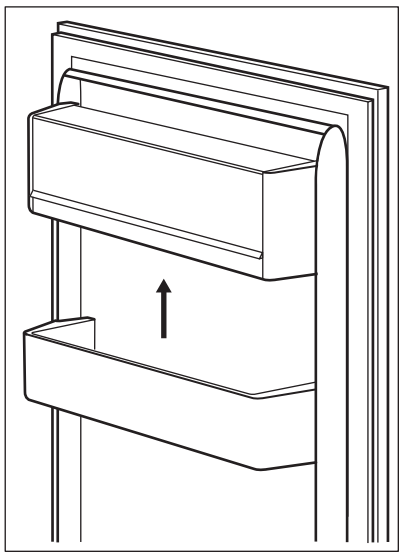

Movable shelves

The walls of the refrigerator are equipped with a series of runners so that the shelves can be positioned as desired.

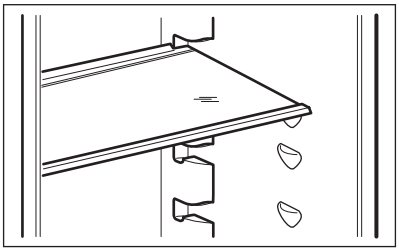

Do not move the glass shelf above the vegetable drawer to ensure correct air circulation.

Fan function

The Fan function lets the food cool quickly and keeps more uniform temperature in the compartment.

Switch on the Fan when the ambient temperature exceeds 25°C.

Press the switch (A) to switch on the fan. The green light (B) comes on.

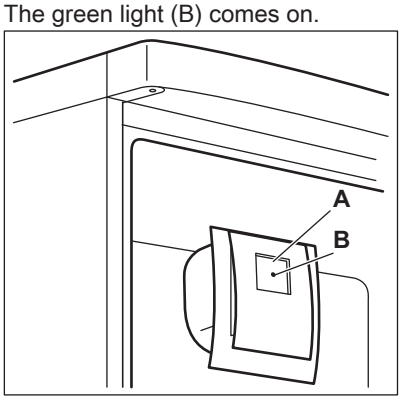

When you switch off the appliance remember to turn off the fan by pressing the button (A). The green light (B) comes off.

Temperature indicator

For proper storage of food the refrigerator is equipped with the temperature indicator. The symbol on the side wall of the appliance indicates the coldest area in the refrigerator.

If OK is displayed (A), put fresh food into area indicated by symbol, if not (B), adjust the temperature controller to a colder setting and wait 12 hours before checking the temperature indicator again.

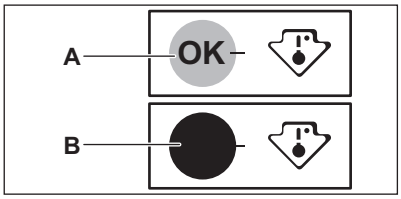

After putting fresh food into the appliance or after opening the door repeatedly or for a long period, it is normal for the indicator not to show OK. Wait at least 12 hours before readjusting the temperature controller.

Freezing fresh food

The freezer compartment is suitable for freezing fresh food and storing frozen and deep-frozen food for a long time.

To freeze fresh food activate the FastFreeze function at least 24 hours before placing the food to be frozen in the freezer compartment.

The maximum amount of food that can be frozen in 24 hours is specified on the **rating plate**, a label located on the inside of the appliance.

The freezing process lasts 24 hours, during this period do not add other food to be frozen.

When the freezing process is completed, you can restore previously set temperature (see "FastFreeze function").

Storage of frozen food

When first starting-up or after a period out of use, before putting the products in the compartment let the appliance run at least

2 hours with the FastFreeze function turned on.

In the event of accidental defrosting, for example due to a power failure, if the power has been off for longer that the value shown in the technical data chart under "Rising time", the defrosted food must be consumed quickly or cooked immediately and then re-frozen (after cooling).

Thawing

Deep-frozen or frozen food, prior to being used, can be thawed in the refrigerator compartment or at room temperature, depending on the time available for this operation.

Small pieces may even be cooked still frozen, directly from the freezer: in this case, cooking will take longer.

Ice-cube production

This appliance is equipped with one or more trays for the production of ice-cubes.

Do not use metallic instruments to remove the trays from the freezer.

1. Fill these trays with water
2. Put the ice trays in the freezer compartment.

HINTS AND TIPS

Normal operating sounds

The following sounds are normal during operation:

- A faint gurgling and bubbling sound from coils sound when refrigerant is pumped.
- A whirring and pulsating sound from the compressor when refrigerant is pumped.
- A sudden cracking noise from inside appliance caused by thermic dilatation (a natural and not dangerous physical phenomenon).
- A faint click noise from the temperature regulator when the compressor switches on or off.

Hints for energy saving

- Do not open the door frequently or leave it open longer than absolutely necessary.

Hints for fresh food refrigeration

- Do not store warm food or evaporating liquids in the refrigerator.
- Cover or wrap the food, particularly if it has a strong flavour.
- Position food so that air can circulate freely around it.

Hints for refrigeration

Useful hints:

- Meat (all types): wrap in a suitable packaging and place it on the glass shelf above the vegetable drawer. Store meat for at most 1-2 days.
- Cooked foods, cold dishes: cover and place on any shelf.
- Fruit and vegetables: clean thoroughly and place in a special drawer. Bananas, potatoes, onions and garlic must not be kept in the refrigerator if not packed.
- Butter and cheese: place in a special airtight container or wrap in an aluminium foil or a polythene bag to exclude as much air as possible.
- Bottles: close with a cap and place on the door bottle shelf, or (if available) on the bottle rack.

Hints for freezing

- Freeze only top quality, fresh and thoroughly cleaned food products.
- For more efficient freezing and thawing divide food into small portions.

- Wrap the food in aluminium foil or polythene. Make sure that the packages are airtight.
- To avoid increase in temperature of already frozen food, do not place fresh unfrozen food directly next to it.
- Lean foods store better and longer than fatty ones. Salt reduces the storage life of food.
- Do not eat ice cubes, water ices or ice lollies immediately after taking them out of the freezer. Risk of frostbites.
- It is advisable to show the freezing date on each individual pack to enable you to keep tab of the storage time.

Hints for storage of frozen food

- Make sure that the commercially frozen food products were adequately stored by the retailer.
- Make sure that frozen foodstuffs are transferred from the food store to the freezer in the shortest possible time.
- Once defrosted, food deteriorates rapidly and cannot be refrozen.
- Do not exceed the storage period indicated by the food manufacturer.

CARE AND CLEANING

WARNING! Refer to Safety chapters.

General warnings

CAUTION! Unplug the appliance before carrying out any maintenance operation.

This appliance contains hydrocarbons in its cooling unit; maintenance and recharging must therefore only be carried out by authorized technicians.

The accessories and parts of the appliance are not suitable for washing in a dishwasher.

Periodic cleaning

CAUTION! Do not pull, move or damage any pipes and/or cables inside the appliance.

CAUTION! Do not damage the cooling system.

The equipment has to be cleaned regularly:

1. Clean the inside and accessories with lukewarm water and some neutral soap.
2. Regularly check the door seals and wipe them clean to ensure they are clean and free from debris.
3. Rinse and dry thoroughly.
4. If accessible, clean the condenser and the compressor at the back of the appliance with a brush.
   This will improve the performance of the appliance and save electricity consumption.

Defrosting of the refrigerator

Frost is automatically eliminated from the evaporator of the refrigerator compartment every time the motor compressor stops, during normal use. The defrost water drains out through a trough into a special container at the back of the appliance, over the motor compressor, where it evaporates.

It is important to periodically clean the defrost water drain hole in the middle of the refrigerator compartment channel to prevent the water overflowing and dripping onto the food inside.

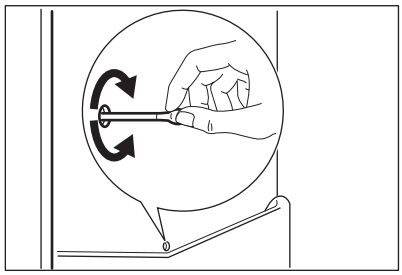

Defrosting of the freezer

CAUTION! Never use sharp metal tools to scrape off frost from the evaporator as you could damage it.
A temperature rise of the frozen food packs, during defrosting, may shorten their safe storage life.
Do not use a mechanical device or any artificial means to speed up the thawing process other than those recommended by the manufacturer.

A certain amount of frost will always form on the freezer shelves and around the top compartment.

Defrost the freezer when the frost layer reaches a thickness of about 3-5 mm.

1. Pull out the plug from the wall socket or switch off the appliance.
2. Remove any stored food, wrap it in several layers of newspaper and put it in a cool place

CAUTION! Do not touch frozen goods with wet hands. Hands can freeze to the goods.

3. Open the door.
   In order to speed up the defrosting process, place a pot of warm water in the freezer compartment. In addition, remove pieces of ice that break away before defrosting is complete.
4. When defrosting is completed, dry the interior thoroughly.
5. Switch on the appliance.
6. Set the temperature regulator to obtain the maximum coldness and run the appliance for two or three hours using this setting.
7. Reload the previously removed food into the compartment.

Periods of non-operation

When the appliance is not in use for long periods, take the following precautions:

1. Disconnect the appliance from electricity supply.
2. Remove all food.
3. Clean the appliance and all accessories.
4. Leave the door/doors open to prevent unpleasant smells.

CAUTION! If you want to keep the appliance switched on, ask somebody to check it once in a while to prevent the food inside from spoiling in case of a power failure.

TROUBLESHOOTING

WARNING! Refer to Safety chapters.

What to do if...

Problem	Possible cause	Solution
The appliance does not operate.	The appliance is switched off.	Switch on the appliance.
	The mains plug is not connected to the mains socket correctly.	Connect the mains plug to the mains socket correctly.
	There is no voltage in the mains socket.	Connect a different electrical appliance to the mains socket. Contact a qualified electrician.
The appliance is noisy.	The appliance is not supported properly.	Check if the appliance stands stable.
The lamp does not work.	The lamp is in stand-by.	Close and open the door.
	The lamp is defective.	Contact the nearest Authorised Service Centre.
The compressor operates continually.	Temperature is set incorrectly.	Refer to "Operation".
	Many food products were put in at the same time.	Wait some hours and then check the temperature again.
	The room temperature is too high.	Refer to climate class chart on the rating plate.
	Food products placed in the appliance were too warm.	Allow food products to cool to room temperature before storing.
	The "FastFreeze" is switched on.	Refer to "FastFreeze function".
There is too much frost and ice.	The door is not closed correctly or the gasket is deformed/dirty.	Refer to "Closing the door".
	The water drainage plug is not correctly positioned.	Position the water drainage plug in the correct way.
	Food products are not wrapped properly.	Wrap the food products better.
	Temperature is set incorrectly.	Refer to "Operation" .
The compressor does not start immediately after pressing the "FastFreeze", or after changing the temperature.	This is normal, no error has occurred.	The compressor starts after a period of time.

Problem	Possible cause	Solution
Water flows on the rear plate of the refrigerator.	During the automatic defrosting process, frost melts on the rear plate.	This is correct.
Water flows inside the refrigerator.	Food products prevent the water to flow into the water collector.	Make sure that food products do not touch the rear plate.
	The water outlet is clogged.	Clean the water outlet.
Water flows on the floor.	The melting water outlet is not connected to the evaporative tray above the compressor.	Attach the melting water outlet to the evaporative tray.
Temperature cannot be set.	The "FastFreeze function" is switched on.	Switch off "FastFreeze function" manually, or wait until the resets automatically to set the temperature. Refer to "FastFreeze function".
The temperature in the appliance is too low/too high.	The temperature regulator is not set correctly.	Set a higher/lower temperature.
	The door is not closed correctly.	Refer to "Closing the door".
	The food products' temperature is too high.	Let the food products temperature decrease to room temperature before storage.
	Many food products are stored at the same time.	Store less food products at the same time.
	The door has been opened often.	Open the door only if necessary.
	The "FastFreeze function" is switched on.	Refer to "FastFreeze function".

ⓘ If the advice does not lead to the desired result, contact the nearest Authorised Service Centre.

Replacing the lamp

The appliance is equipped with a longlife LED interior light.

Only service is allowed to replace the lighting device. Contact your Authorised Service Centre.

Closing the door

1. Clean the door gaskets.
2. If necessary, adjust the door. Refer to assembly instructions.
3. If necessary, replace the defective door gaskets. Contact the Authorised Service Centre.

TECHNICAL DATA

Dimensions of the recess		
Height	mm	1780
Width	mm	560
Depth	mm	550
Rising time	Hours	20
Voltage	Volts	230 - 240
Frequency	Hz	50

The technical information is situated in the rating plate, on the external or internal side of the appliance and in the energy label.

ENVIRONMENTAL CONCERNS

Recycle materials with the symbol ♲. Put the packaging in relevant containers to recycle it. Help protect the environment and human health by recycling waste of electrical and electronic appliances. Do not dispose of appliances marked with the symbol with the household waste. Return the product to your local recycling facility or contact your municipal office.